INSTALLATION MANUAL LED HIGH MAST LIGHT

WIRING DIAGRAM

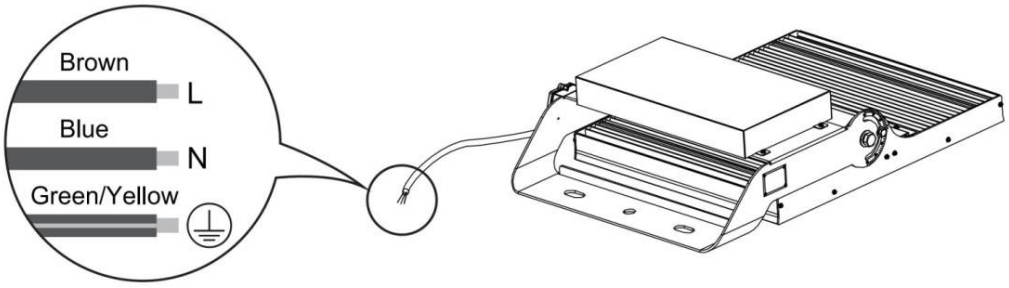
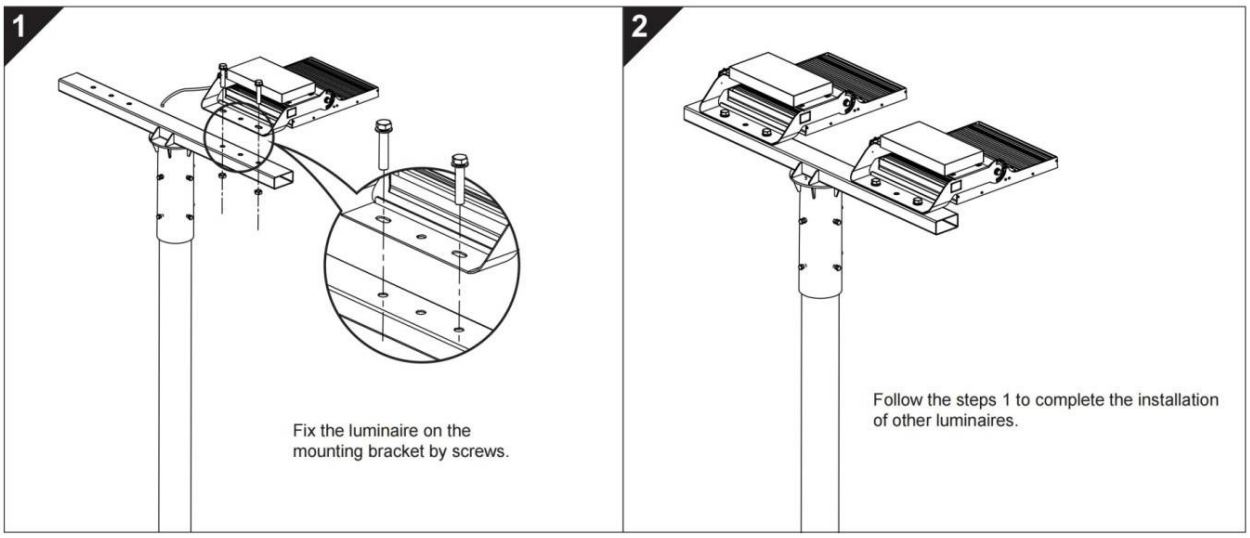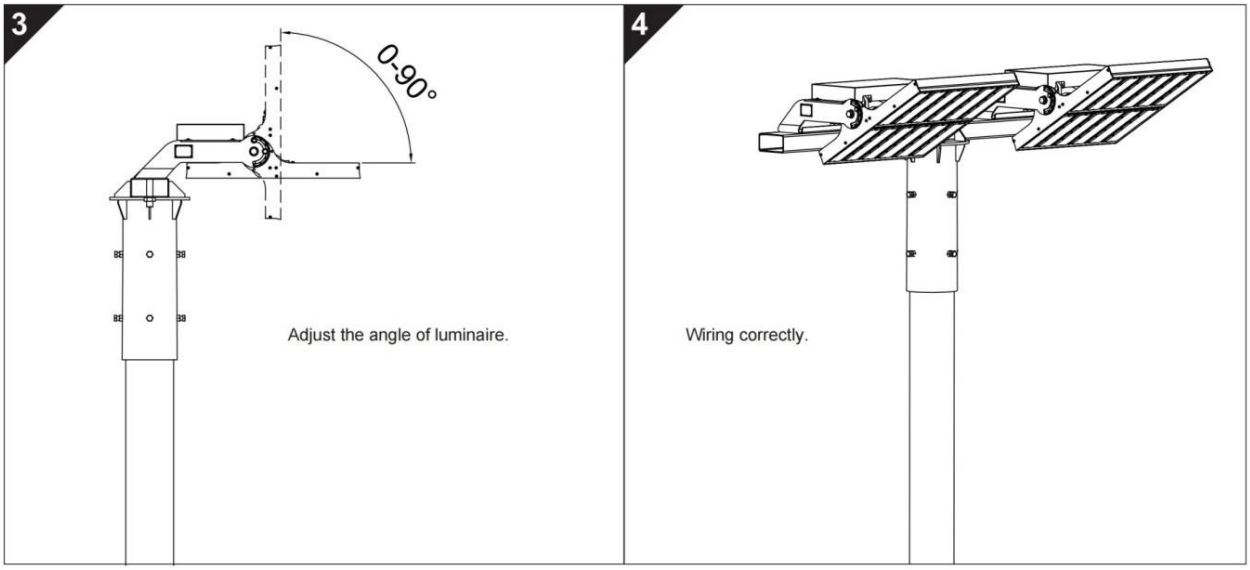
INSTALLATION